CDG Engineering Services

How CDG Can Help

- **Worldwide** – experienced engineers available across

  USA – experienced engineers available across USA, UK, India
- **Experienced** – 40+ years of aviation and aerospace program experience
- **Flexible** – able to ramp up / ramp down to your changing schedule requirements
- **Affordable** – blended global team pricing options for significant cost savings
- **Reliable** – backed by the Boeing reputation for high quality and reliability
- **Accurate** – our quality processes support our "right first time" approach to quality

Options for:

- **On-site or Off-site Project Workers** – to meet your unique project needs
- **Offshore or Onshore** – You choose to fit your budget and information control requirements
- **Hassle-Free, Local Project Management** – Project Managers based in your region

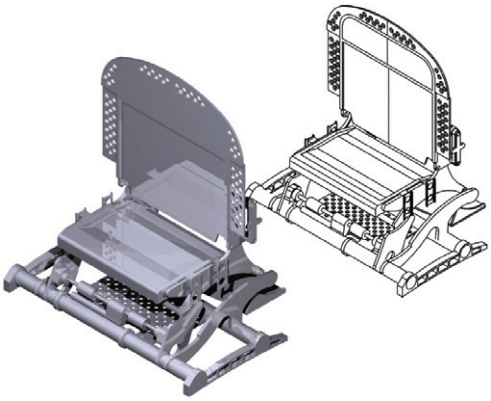

Fast-paced, engineering-focused industries demand flexible resource strategies and immediate access to advanced engineering support. CDG offers a broad scope of Engineering Services to support the entire engineering lifecycle, from initial design and manufacturing, to engineering change management, to development of technical product support documentation and training materials.

Engineering Design Services

CDG offers a complete range of Engineering Design Services to address all aspects of the product lifecycle. Let us help you deliver your engineering projects cost-effectively and on time.

Concept and Design

- Primary Structures
- Mechanical Systems (both linear & rotary)
- Composite Structures & Components
- Hydraulic Components & Systems
- Pneumatic Components & Systems
- Electrical Components & Systems
- Auxiliary Equipment

Detail Design & Drafting Services

- Parametric Model Development
- Reverse Engineering
- GD & T - (ANSI Y14.5M Standards)
- Detail Drawings (DOD-STD-100, DOD-D1000 and ANSI Drawing Standards)
- Checking / Verification / Validation
- Release / PDM

Design Engineering Analysis

- Stress and Finite Element Modeling Vibration
- Fatigue and Damage Tolerance Analysis
- Electro-Mechanical
- Heat Transfer
- Sound
- Material Analysis
- Weight Optimization

Engineering Change Management

- Engineering Orders (EO)
- Engineering Change Notices (ECN)
- Drawing Updates, dictated by updated design data
- Bill of Material (BOM) changes
- Specification Changes – from regulatory requirements

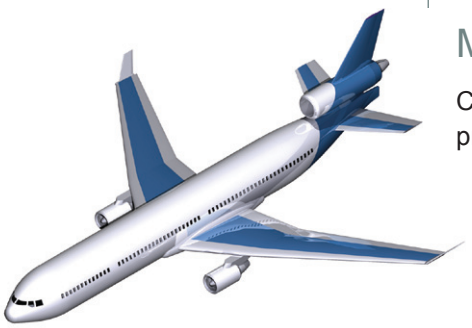

Engineering Software Expertise

To support your engineering services requirements, CDG has expertise in a number of leading engineering software support tools, including:

- CATIA
- ENOVIA
- DELMIA
- SolidWorks
- AutoCAD®
- Pro/ENGINEER® (Pro/E)
- Mathcad / MATLAB / Mathematica
- Arbortext IsoDraw® & IsoDraw CAD Process
- Boeing BoGART
- And many others

Engineering design project files can be delivered to your organization in any of these formats.

Visit our web site or contact us for more information about other formats or platforms supported.

CATIA, ENOVIA, DELMIA, and SolidWorks, are trademarks of Dassault Systèmes.

Arbortext IsoDraw® and Pro/ENGINEER® are trademarks or registered trademarks of Parametric Technology Corporation or its subsidiaries in the U.S. and in other countries.

AutoCAD® is a registered trademark of Autodesk, Inc.

All other products listed are the trademarks of their respective owners.

Manufacturing Support Services

CDG offers a collection of technologies and methods to help our customers define how products are to be manufactured.

- **3D Modeling and Simulation Services**
- **Composites / Materials Engineering and Selection**
- **Discrete Design Optimization**
- **Safety Analysis/Engineering**
- **Reliability and Maintainability**

Conversion Services

CDG helps transition your data to and from a number of engineering software data formats, including:

- **2D to 3D (with Design Intent)**
- **2D to 3D (without Design Intent)**
- **3D to 2D**
- **DXF, IGES, STEP, STL & Raster Images - converted to multiple formats and/or platforms**

Additional Services

Digital imaging services are also available to support scanning and conversion of blueprints, engineering drawings, aperture cards, microfilm, microfiche, or other documents in numerous formats. Data captured in the form of scanned image files can be converted for delivery in a number of selected software formats and delivery platforms.

Tell us about your specific project requirements for engineering design services. CDG's professional engineering services team will respond right away and work with you to outline options to help meet your needs for efficient and cost-effective engineering solutions.

CDG
a Boeing Company
www.cdgnow.com

To learn more about CDG Engineering Services

email: marketing@cdgnow.com

or call: USA & Canada
(800) 862-5691 (714) 503-4200

Europe
+44 (0) 1707 367700

India
+91 44 45920000

ENGDSGNSVCS-092911-C

Corporate Headquarters: Building 801, 5th Floor, 4060 N. Lakewood Blvd, Long Beach, CA 90808 USA

© CDG